AUTOGUIDE EQUIPMENT

Operating Instructions

and

Spare Parts Lists

MAXI Postmaster

Autoguide Equipment
Stockley Road
Heddington
Nr. Calne
Wiltshire SN11 0PS
England
Tel: +44 (0) 1380 850885
Fax: +44 (0) 1380 850010
Website: www.autoguide.co.uk

Issue 1.0 ID: M038 Published 02 May 2019

These instructions give safety and operations information regarding the use of a Digger Mounted Postmaster supplied by Autoguide Equipment. They contain the relevant information for products:

Product Code	Description	Force *(kN)*
39844	Maxi Postmaster	110

To ensure optimum results when operating this machine it is very important to read this manual carefully, the information will prepare you to do a better, safer job.

Before operating the machine you should familiarise yourself with the instructions in this manual. Incorrect use can lead to damage which is not covered by the Warranty Conditions. This may create a dangerous situation or lead to unsatisfactory results.

These operating instructions **MUST** always be made available to the person or persons operating this machine.

To assist in the ordering of spares, or other communications with our company, the serial number of the relevant equipment supplied, has been recorded below for your information.

Model No:-

Serial No:-

Date of delivery:-

CONTENTS

INFORMATION

Your Postmaster has been individually built with great emphasis on quality, strength and simplicity of design and with routine care will give many years of trouble free operation.

The following instructions have been written to cover the use and maintenance of the machine. Care should be taken to ensure that you are referring to the correct section of your machine before carrying out any adjustments, or when ordering spare parts.

Like all mechanical products, regular cleaning, lubrication and maintenance will ensure a longer trouble free life. These instructions make no attempt to go beyond routine maintenance, and it is strongly advised that you contact your dealer should any major repairs become necessary.

Use only genuine service parts; non genuine parts may not meet standards required for safe and satisfactory operation.

Observe all safety information in the manual and on decals fitted to the machine and power unit.

Safety Instructions

1. Read and understand this operator's manual prior to operating the machine and keep it in a convenient place for future reference.
2. Keep untrained personnel away from the machine whilst it is in operation.
3. Keep all guards and safety devices in place.
4. Do not operate machine with guards removed.
5. Beware, pressured hydraulic oil can be very dangerous and can penetrate the skin - TAKE THE UTMOST CARE.
6. Keep hands, feet and loose clothing away from moving parts.
7. Always switch off the machine before making any adjustments or when carrying out lubrication and servicing.
8. Keep all nuts, bolts and fasteners tightened.
9. Check machine regularly for damaged or worn parts.
10. If the machine is left unattended ensure that it is locked or disabled to prevent use by untrained personnel.

Daily Check Items

1. Check the unit is properly and securely attached to the crane/excavator unit.
2. Checks that all nuts and bolts are secure, mounting pins are properly retained, and all safety shields are in place. (All nuts and bolts should be checked after the first 10 hours of operation.)
3. Check the condition and security of the safety webbing.
4. Lubricate all grease nipples.

POSTMASTER SPECIFICATION

	Maxi Postmaster
Eccentric Force	110 kN
Max. post Diameter	12” (300mm) diameter
Hydraulic Service	Double acting. 60-80 l/min
Maximum Pressure	200 BAR
Suitable Machines	5 to 8 tonne Excavator

Optional Equipment

A range of additional attachments are available for a variety of different posts and conditions. They are:

1. Flow Divider for higher flow machines – *For hard to reach jobs a larger machine is sometimes necessary. To protect the motor and seals it can be necessary to add a flow control option to prevent internal damage.*
2. Mounting Bracket to fit Loaders – *a special bracket so that the Postmaster can be used when mounted on loaders and hanges level.*
3. Rock Spike – *A rock spike can be supplied to act as a pilot for the post. This can be gripped by the standard jaws. Standard size 60mm diameter 1m long*
4. Dibber – *To create a concrete back fill hole and leave the central bar in place. A 250 x 150mm compacted void is left in the ground and either a length of re-bar or angle is let in the ground. The advantages are no soil away and a compacted hole prepped for cement.*

5. Post Clamps - *A wide range of clamps are available to suit posts of all shapes, sizes and material. With a drawing of the top of the post the jaws will be manufactured to suit. A range of readily available jaws are shown below.*

Description	Kit Number	Drawing	Schematic
Round Section	40938	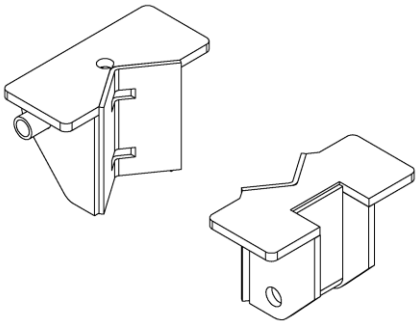	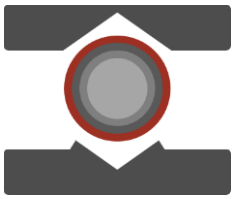
Square or I Section	40494	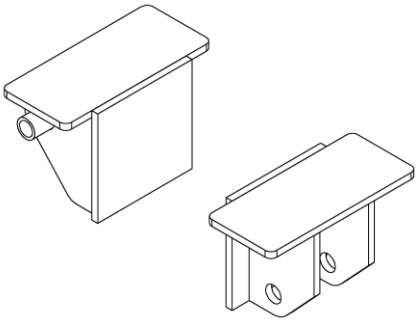	
C or J Section	Size dependent - contact Autoguide	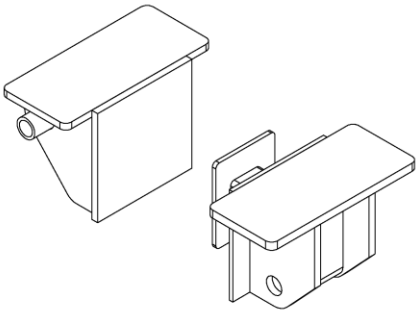	
Z section	Size dependent - contact Autoguide	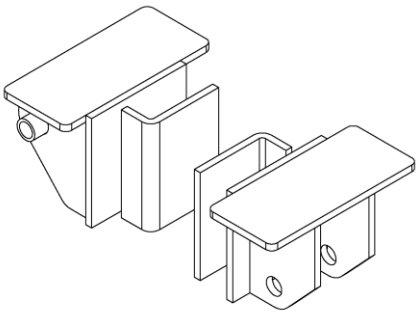	
Round Section w/ fingers for post handling	40641	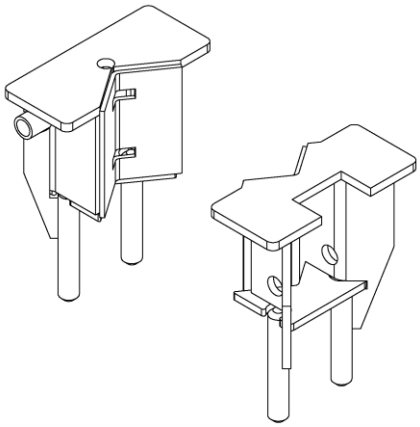	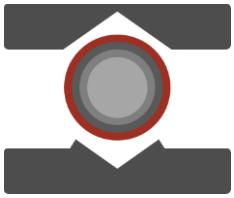

Specifying the Unit

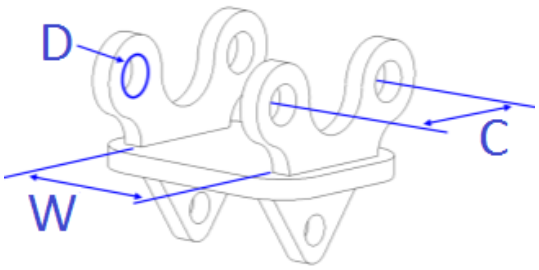

The 4 bolt mounting plate allows the fitment of brackets to suit most diggers in the quoted range. It is essential to confirm the pin diameter (D), width of boom (W), and pin pitch (C) before ordering. Not all quick hitches will be suitable for use with the Postmaster, although those designed for hammer operations should be suitable – please check with the supplier first.

Standard post clamps can be adjusted for post size and specials can be devised where possible.

Posts can be wood, metal, GRP or concrete, but special clamps will be needed. Posts may not need points but this can help in hard soils. Clearly some soils will be too hard for successful operation, but the use of a steel pilot or rock auger can usually solve the problem. Generally, pilot holes should be 30% smaller than the post to ensure a good tight installation.

POSTMASTER INSTALLATION

The safe operation of this equipment is the responsibility of the operator, who should be familiar with the lifting process, the power unit and all safety practices before starting operations.

Attaching the Postmaster to the Power Unit

1. **SWITCH OFF** the power unit.
2. Attach the Postmaster to the digger using standard mounting pins or a quick hitch.
3. Connect the auxiliary supply hoses together and flush the system through for a minimum of 10 minutes to ensure any debris is removed by the filter system of the supply.
4. De-pressurise hydraulic systems using the manufacturers approved techniques before connecting the Postmaster
5. Connect the Postmaster's two ½" hydraulic feed hoses to the auxiliary hydraulic supply, ensuring no debris gets on the connections.

Note: Hose size and condition of any quick couplers that are used will have an effect on the efficient operation of the unit.

Note: If the weather is very cold, allow the oil to warm up before operating the vibrator. The motor used has special seals which will tolerate back pressure up to 30BAR. Forcing cold oil through quick couplers may exceed this limit and compromise seal life.

Note: All hydraulic motors are sensitive to foreign objects in the hydraulic oil. Debris can cause damage thus reducing the efficiency and output power of the motor.

6. Briefly operate the digger's auxiliary circuit to test the Postmaster and ensure operation. **DO NOT** run the vibrator without a post in the jaws.
7. Once complete, lower the Postmaster unit to the ground while not in use.

Pre-operation check list

1. Keep bystanders away from all moving elements.
2. Ensure you are aware of the environment you are working in; be aware of overhead cabling and other utilities services.

POST INSTALLATION

Hydraulics Operation

Operating the hydraulics one way causes the clamp to close, followed by the start of vibration. Reversing the flow opens the jaws without vibration. **DO NOT** run the machine without a post in the jaws.

The Postmaster jaws have multiple positions that enable a wide variety of posts to be inserted without the need for special designs. By rotating the fixed and moving jaws, different combinations provide the ability to hold round posts from 3” to 12” and square posts up to 8”. The chart below shows the orientaions required to put in certain post sizes.

Jaw Adjustment

To adjust the jaws, remove the lynch pin and the jaw pin. The jaws will not fall out as they are held on guide rails. Slide the jaws into the desired position, or slide out and rotate to desired position. Align the relevant holes on the jaw and side plates,reinsert the jaw pin and lynch pin.

POST DIAMETER 3"

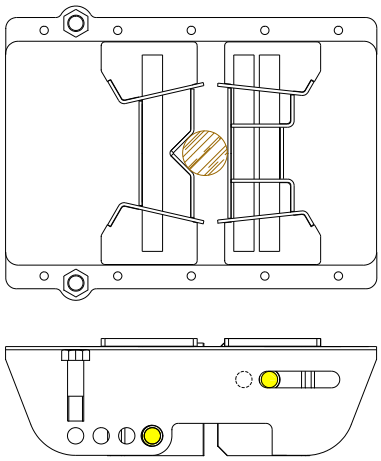

POST DIAMETER 6"

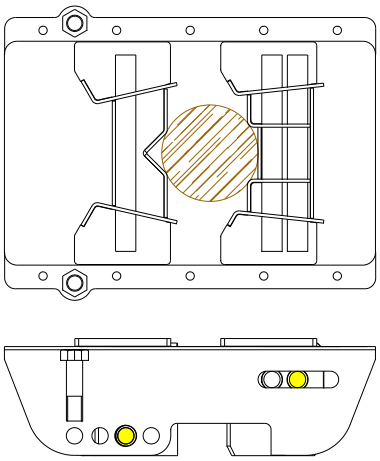

POST DIAMETER 12"

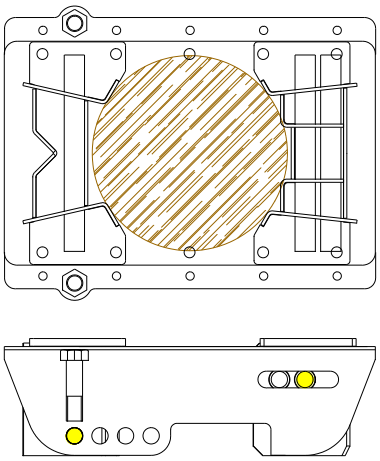

POST RECT' 4" X 6"

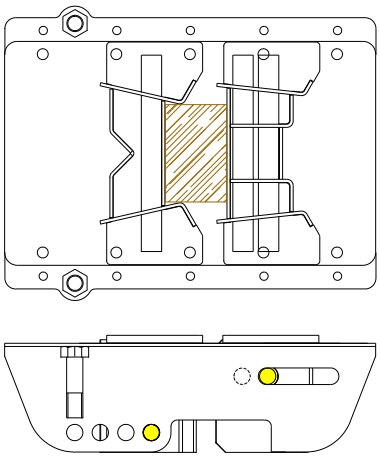

POST RECT' 6" X 3"

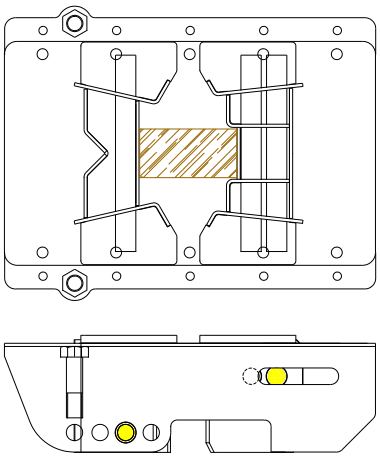

POST SQUARE 6" X 6"

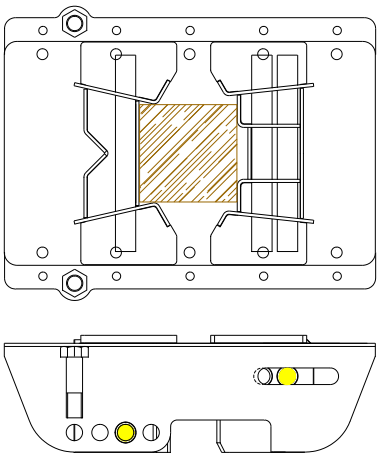

POST SQUARE 7" X 7"

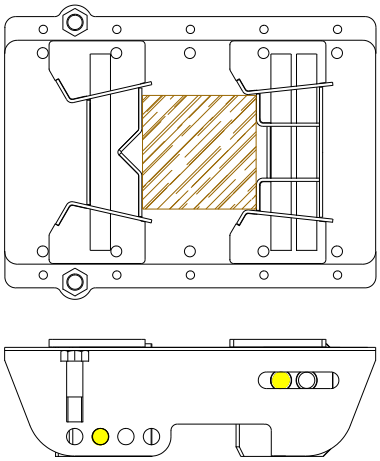

POST SQUARE 8" X 8"

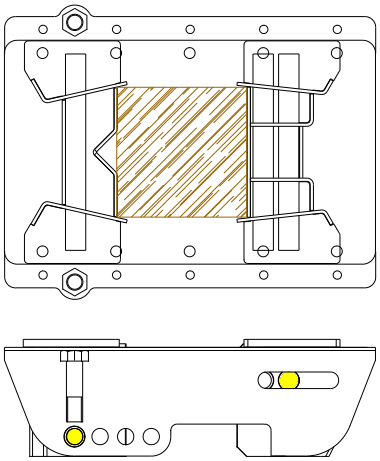

Operation Sequence

1. Stand a post vertically, and move the Postmaster into position directly above it.

2. Keeping the post central in the jaws, lower the Postmaster until the base of the Postmaster sits on top of the post.

3. Gently operate the hydraulic circuit to close the jaws.

4. Lift the post and adjust the bucket crowd angle to be parallel to the ground, allowing the Postmaster to hang freely. Ensure the excavator blade is lowered to add stability.

5. Using the boom, move the post into the desired position and push it into the surface if suitable ground.

6. Start the vibration and push the post into the ground, ensuring the post is pushed vertically downwards.

7. Once the post is installed to the desired depth, simply release the jaws and lift the Postmaster away.

General Principles of Operation

You may find it useful to reduce oil flow by reducing engine revs – at low flow the vibration amplitude will be greater.

- Make sure the crowd ram keeps the rubber buffers level and not twisted.
- Try to imagine the vibrator and post as one unit with the excavator merely guiding and pushing the post.
- Vary the vibration frequency by changing engine speed or feathering the valve to get the best effect.
- In general, metal posts need higher frequency vibration than wooden ones.
- Posts can be vibrated sideways or extracted.
- Use of a template will aid in ensuring accurate pitch for post and rail fencing.

MAINTENANCE

1. Keep all hardware tight – re-torque regularly until stable.
2. Inspect all hoses for signs of wear and replace as necessary.
3. Inspect the rubber buffers for signs of cracking – replace promptly to prevent failure.
4. The gearbox contains 0.5 litres of universal oil. This is sufficient for 12 months operation, so annually remove the lid, pour out the old oil, check all hardware, and add 0.5 litres of new oil. **DO NOT OVERFILL**. Re-seal the lid using a silicone gasket sealant.
5. Inspect the unit on a regular basis and check for oil leaks. Rectify any that are seen – and if it is gearbox lubricant, verify that a minimum depth of 8mm is present in the gearbox.
6. All bearings are of sealed type and require no lubrication.
7. Loctite retaining compound should be used on the bolts in the rubber buffers.
8. Replace any worn pins and locking hardware as soon as wear is apparent. Note that locking pins should be installed horizontally rather the vertically and use conventional split pins where rotation is possible.

SAFETY

General Safety Guidance

1. The excavator should be correctly maintained and operated by a trained and competent person.
2. The banksman and machine driver need to establish a system of communication which is thoroughly understood. It may be appropriate to wear radio communication equipment in conjunction with appropriate PPE, to ensure consistent safe communication.
3. We believe that when correctly operated, the Autoguide Postmster is safer than a conventional falling weight post driver. Nevertheless, take care to avoid contact with the machine and stay out of its working area whenever it is working. Fence posts can fail unexpectedly so stay out of the working zone of the machine.
4. Hydraulic oil can cause severe injury, either because it is at high pressure or high temperature. Take care to check hoses and connections and rectify any damage or leakage.
5. The Postmaster has proven to exceed its original design objectives. However, it must be accepted that satisfactory performance will only be achieved in conjunction with sympathetic operators, careful work planning and optimum base machine performance.
6. The basic concept demands the use of a twin shaft vibrator, which results in pure vertical movement. The vibrating weights must overcome the dead weight of the gearbox, post clamp and the post. The rubber mounts allow this vibration to take place whilst causing the least possible vibration of the excavator hitch and boom.
7. It follows that larger excavators (usually up to 3 tonnes) will deliver better performance as they have greater mass made up of hitch and boom components.

Optional Flow Control Valve

On larger diggers, an additional flow control valve is required to limit the flow to the Postmaster, to prevent excess oil flow to the Postmaster motor. Excess flow will result in over-speeding of the vibrator and will damage the motor. The flow control valve is set in the factory.

In the event that the Postmaster is connected to a smaller excavator, it may be necessary to open the valve in order to achieve adequate vibration speed.

It is important to do this gradually i.e. 1/4 turn at a time (counter clockwise), to achieve an optimum cycling speed. Note: Turning the valve clockwise will further reduce the flow.

It should also be noted that the vibrator speed is proportional to engine revs, so running the engine at high rev/min may also over-speed the motor.

SPARE PARTS LIST

40537 – Maxi Postmaster Assembly

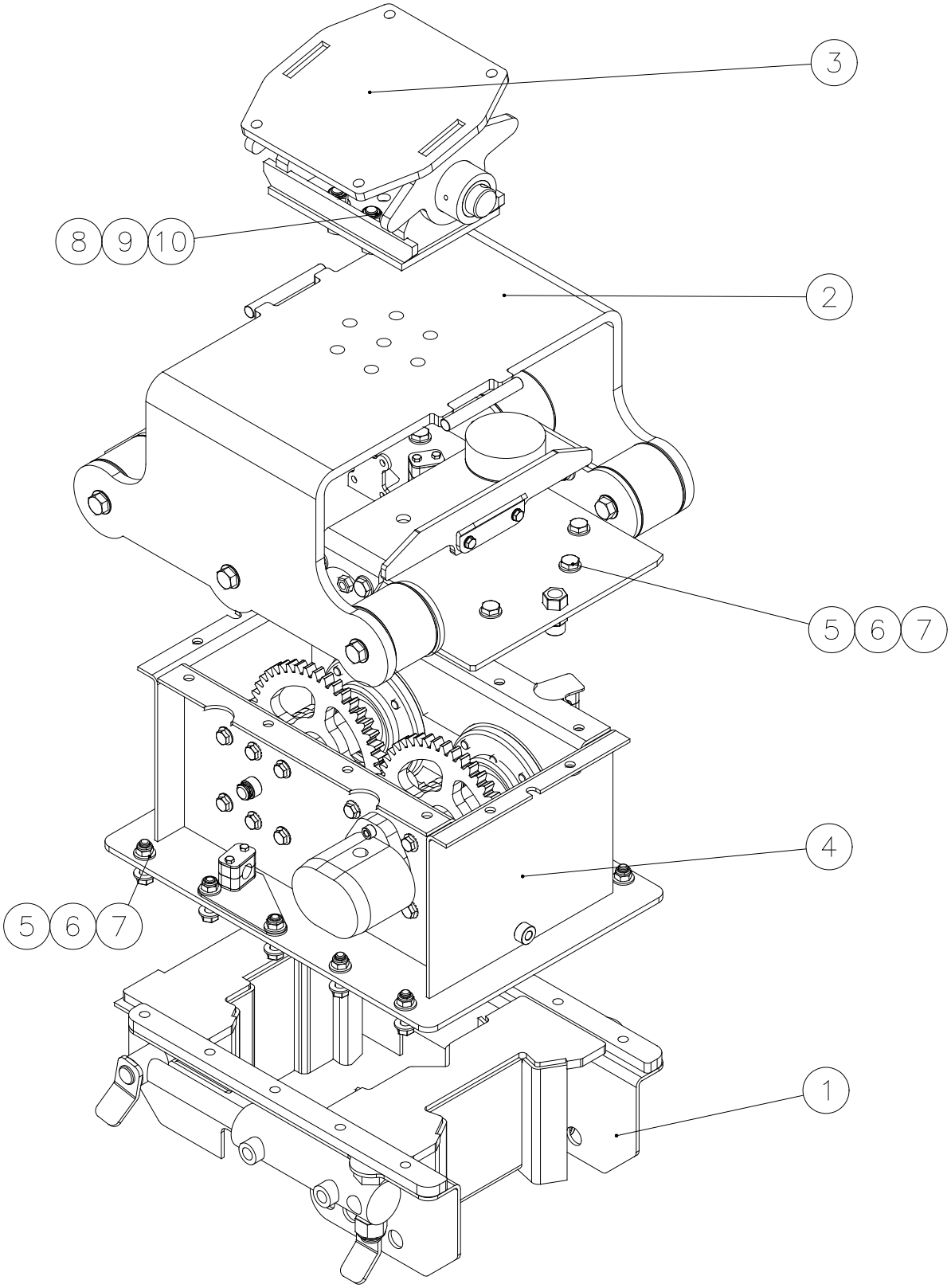

Code	Description
40537	**Maxi Gearbox Assembly**

No.	Code	Description	Quantity
1	40158	12 IN GRIPPER ASSEMBLY	1
2	41607	MAXI COMPLETE LID ASM	1
3	40521	MAXI SWING ATTACHMENT ASSY	1
4	40159	MAXI GBOX ASSY	1
5	03866	BOLT M012 X 050	20
6	02105	WASHER M012 FLAT FORM C	20
7	04021	NUT M012 X 1.5 NYLOC	20
8	02363	BOLT M016 X 050	6
9	02104	WASHER M016 FLAT FORM C	12
10	03941	NUT M016 NYLOC P	6

40159 – 12” Gripper Jaws

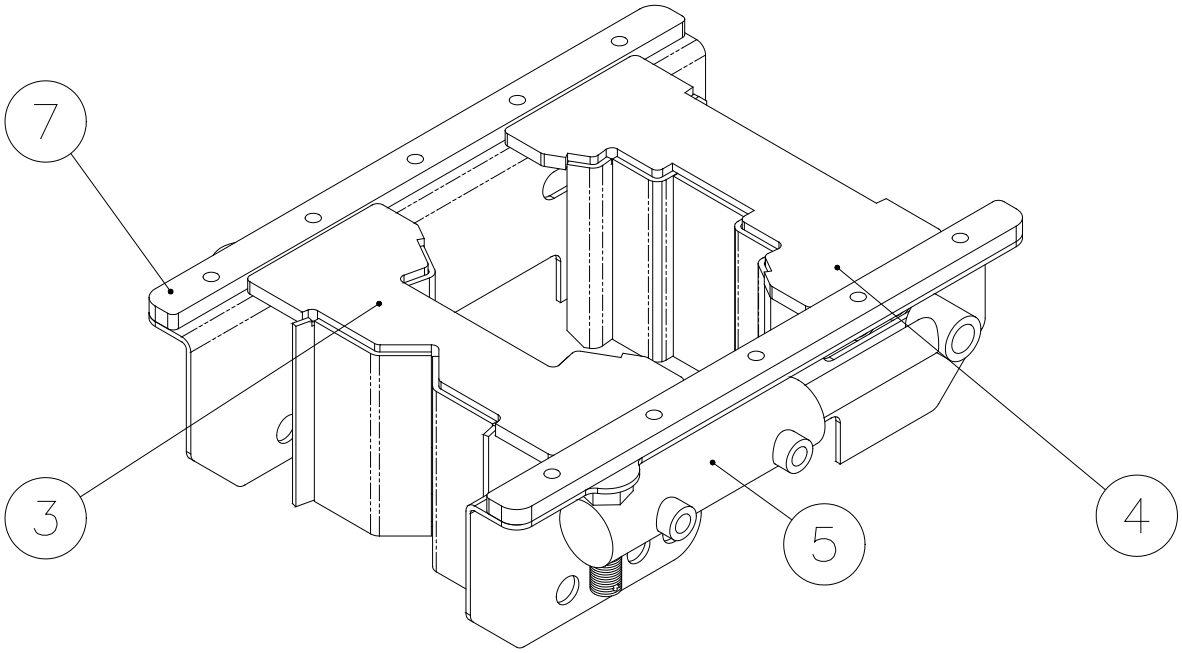

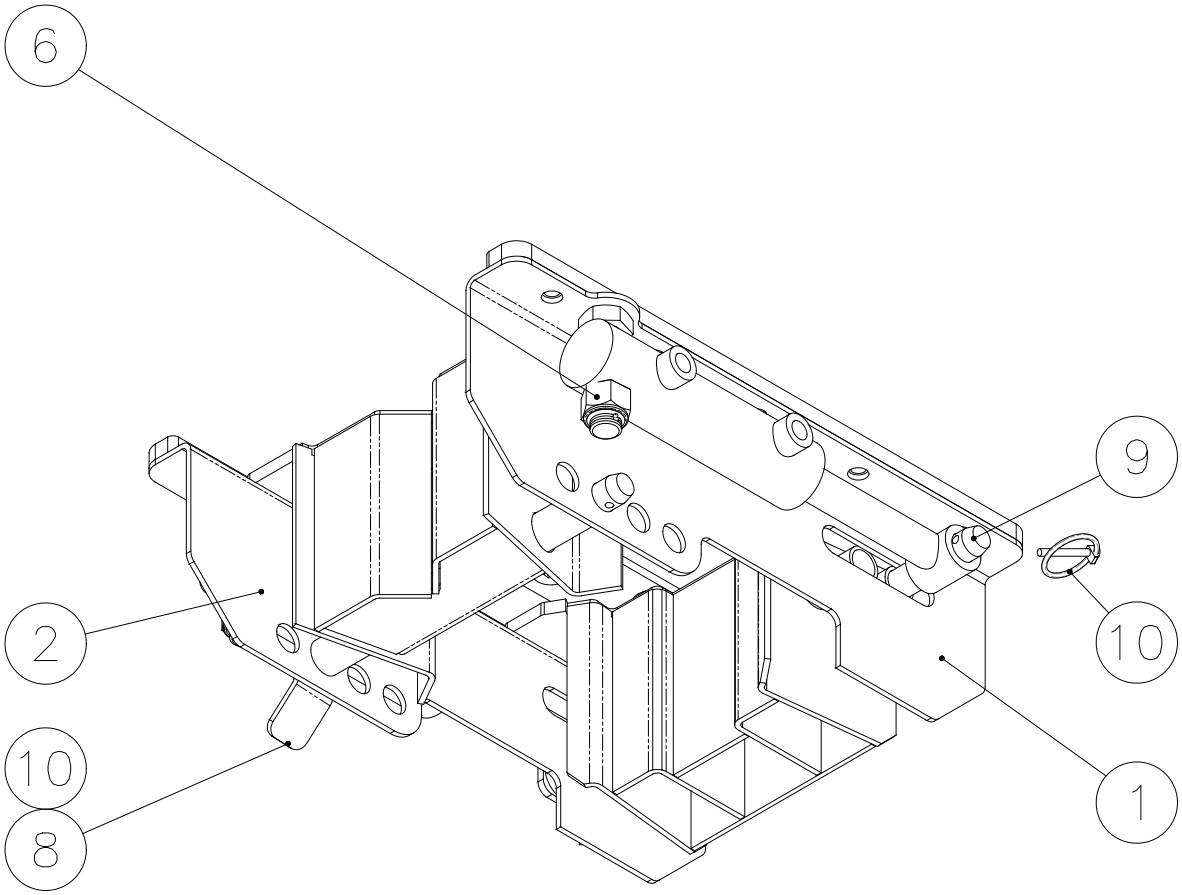

Code	Description
40158	**12" Gripper Jaws**

No.	Code	Description	Quantity
1	40126	GRIPPER SIDEPLATE2 W/A LH	1
2	40166	GRIPPER SIDEPLATE2 W/A RH	1
3	40145	FIXED JAW W/A	1
4	40134	MOVING JAW W/A	1
5	07419	RAM	2
6	02017	NUT 016 UNF NYLOC	2
7	40164	SPACER BAR	2
8	40162	FIXED JAW PIN W/A	1
9	40160	MOVING JAW PIN W/A	1
10	10791	PIN LYNCH	2

40159 – Maxi Gearbox Assembly

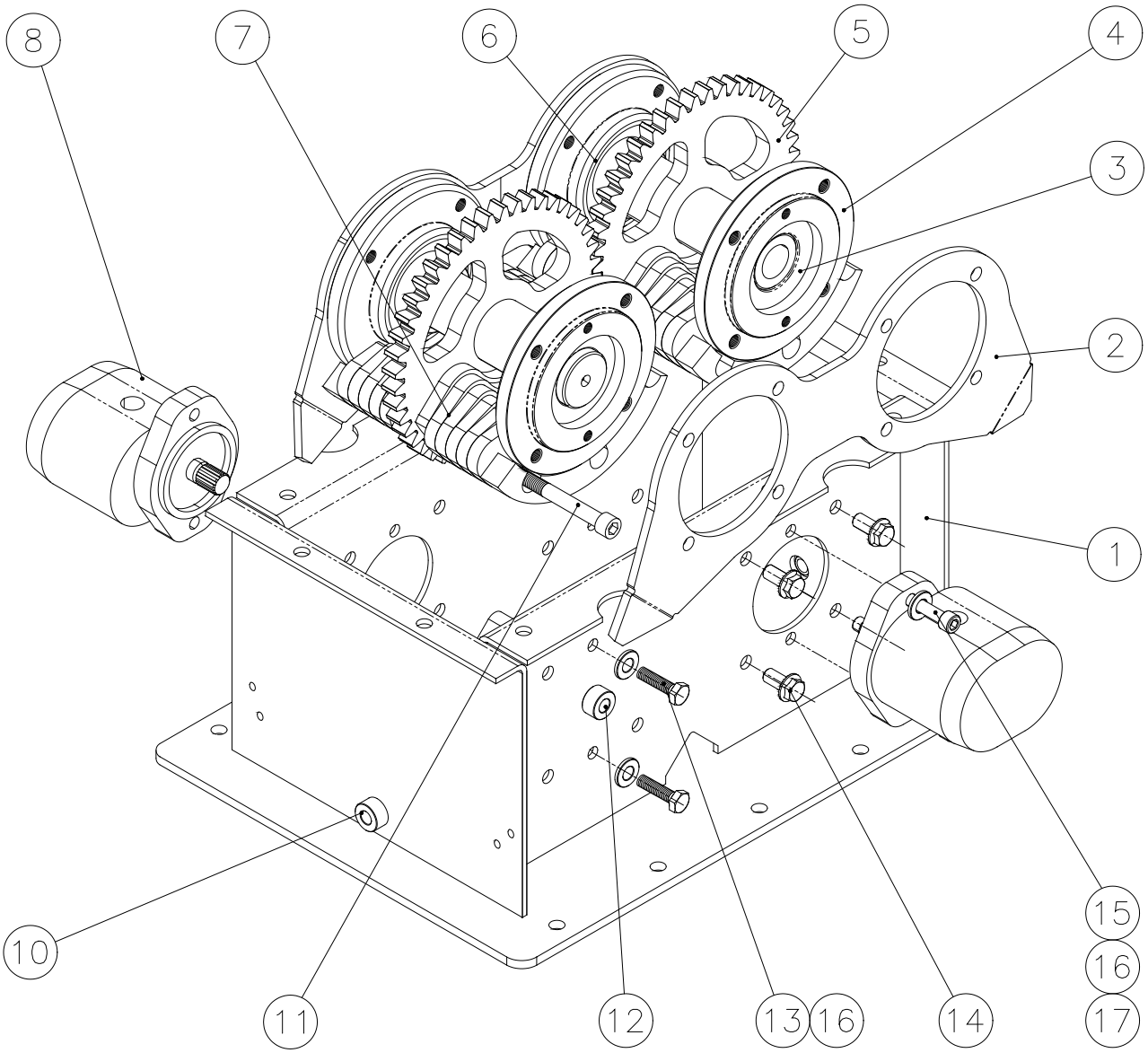

Code	Description
40159	**Maxi Gearbox Assembly**

No.	Code	Description	Quantity
1	40156	GEARBOX W/A MAXI MK3	1
2	39241	SPECTACLE PLATE MAXI POSTMASTER	2
3	10748	BEARING INSERT 1350 50 FS	4
4	39240	FLANGE BEARING HOUSING 2014	4
5	39251	DRIVE SHAFT & GEAR	2
6	06629	CIRCLIP M090 INT	4
7	39262	WEIGHTS W/A MAXI	4
8	05457	MOTOR	2
10	02132	PLUG 004 BSPP	3
11	08690	BOLT M012 X 100 CAP HEAD	12
12	10235	BREATHER 004 BSP	1
13	03807	BOLT M010 X 020 SET	4
14	10398	BOLT M012 X 030 DURLOK	16
15	07534	BOLT M010 X 035 CAP BZP	4
16	02707	WASHER M010 FLAT FORM A	8
17	02525	WASHER M010 SPR REC	4
18	41612	MAXI STAUFF CLAMP BRKT 2	1
19	41611	MAXI STAUFF CLAMP BRKT	1
20	01817	CLAMP STAUFF M020 SINGLE	2

41607 – Maxi Lid Assembly

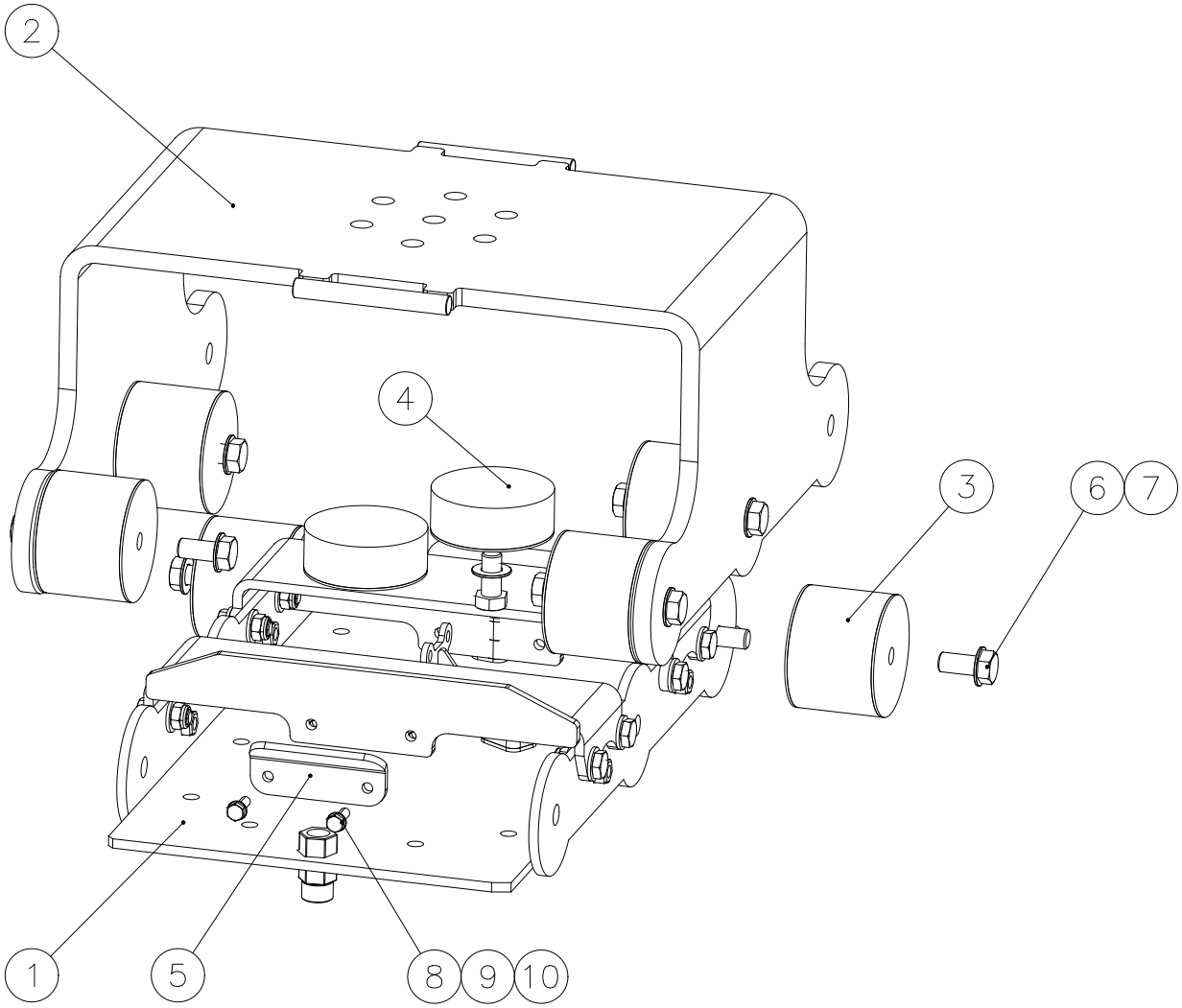

Code	Description
41607	**Maxi Lid Assembly**

No.	Code	Description	Quantity
1	41604	MAXI GEARBOX LID ASM'	1
2	41586	MAXI TOP SUPP'T WA	1
3	07420	RUBBER BUFFER	6
4	29549	RUBBER BUFFER HALF	2
5	35753	WEBBING CLAMP	2
6	01113	BOLT M016 X 035 SET	8
7	02104	WASHER M016 FLAT FORM C	18
8	02452	BOLT M008 X 035	4
9	03409	WASHER M008 FLAT FORM A	8
10	02496	NUT M008 NYLOC TYPE P	4

41604 – Maxi Gearbox Lid Assembly

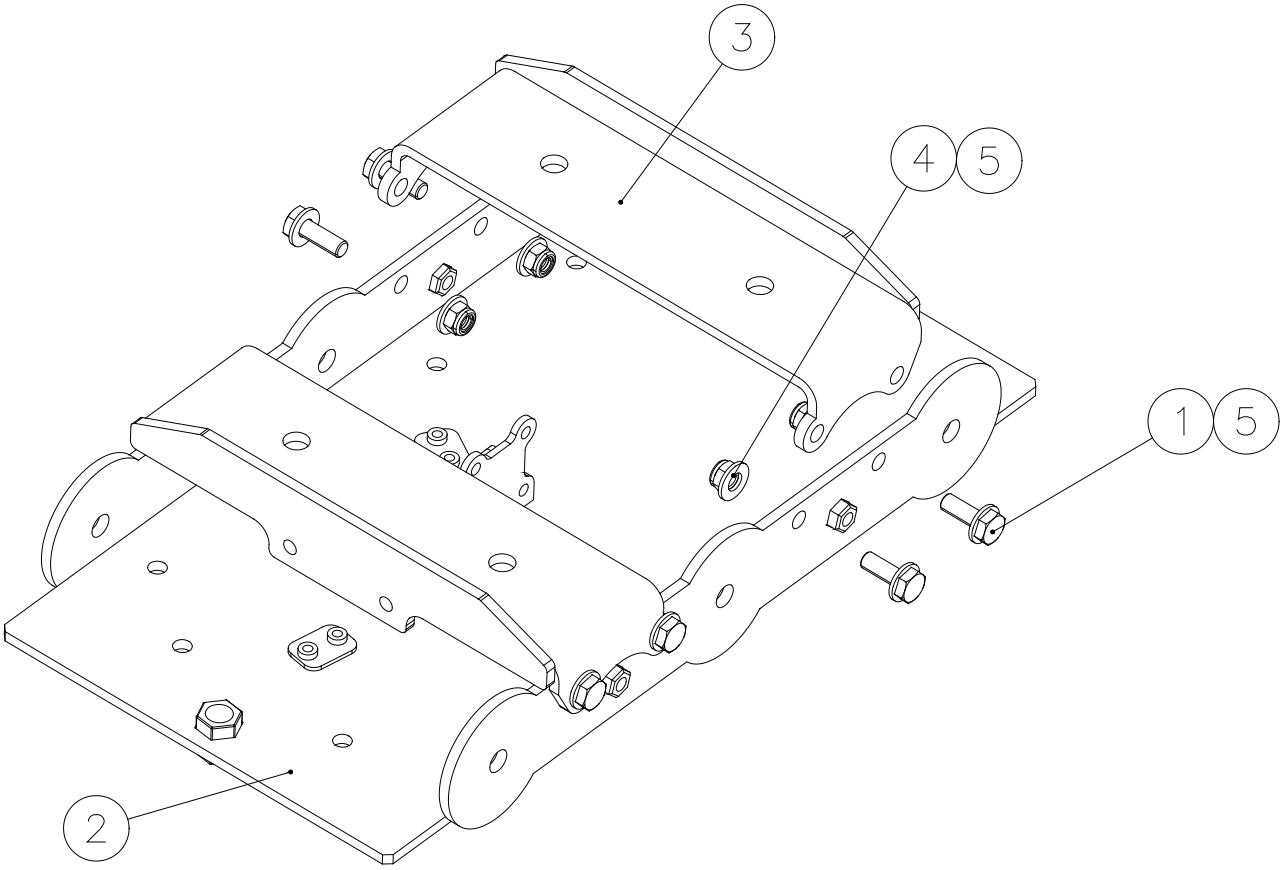

Code	Description
41604	**Maxi Gearbox Lid Assembly**

No.	Code	Description	Quantity
1	05832	BOLT M012 X 035 SET	8
2	41594	MAXI LID ASSEMBLY WA	1
3	41598	MAXI LIFTING STRUT WA	2
4	04021	NUT M012 X 1.5 NYLOC	8
5	02105	WASHER M012 FLAT FORM C	16

40521 - Swing Mount

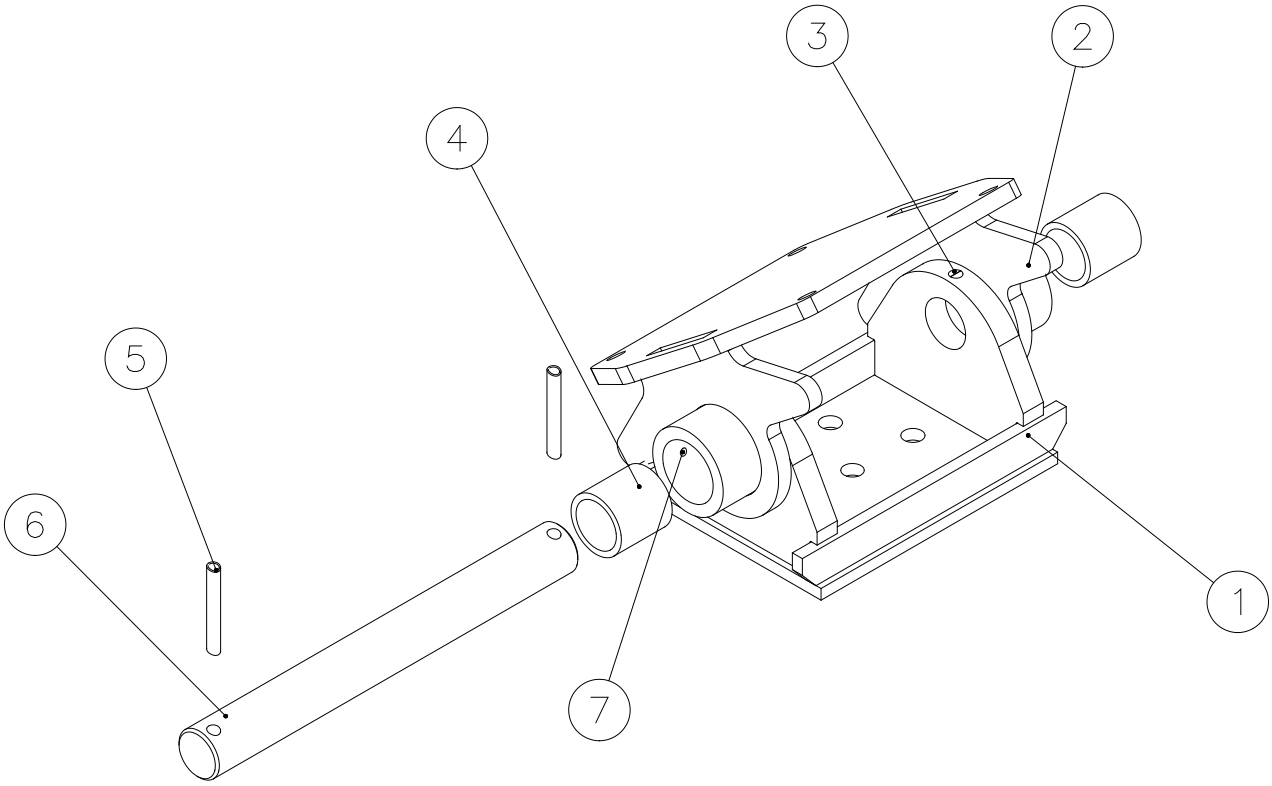

Code	Description
40521	**Swing Mount Assembly**

No.	Code	Description	Quantity
1	40328	SWING MOUNT ADAPTOR MAXI	1
2	40510	MAXI SWING ATTACHMENT W/A	1
3	10852	GRUB SCREW M12 X 20	2
4	10853	BUSH	2
5	07712	PIN ROLL M010 X 060	2
6	40519	PIVOT PIN	1
7	02137	NIPPLE GREASE M006	2

40523 – Hydraulics Maxi Postmaster

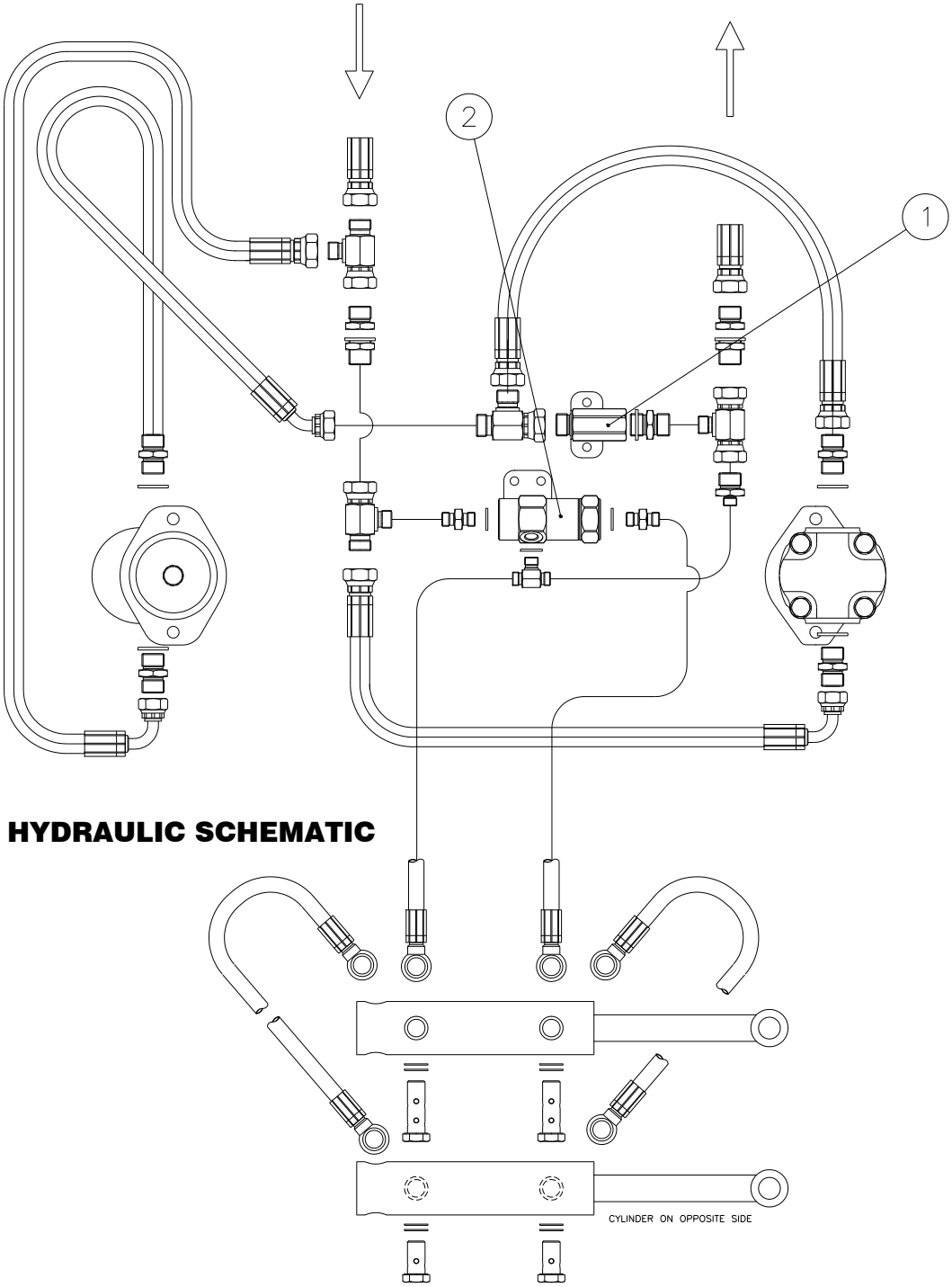

Code	Description
40523	**Hydraulics Maxi Postmaster**

No.	Code	Description	Quantity
1	36380	CHECK VALVE ASSEMBLY MPM	1
2	35976	PILOT OPERATED CHECK W/A	1

41854 - Hoses Maxi Postmaster

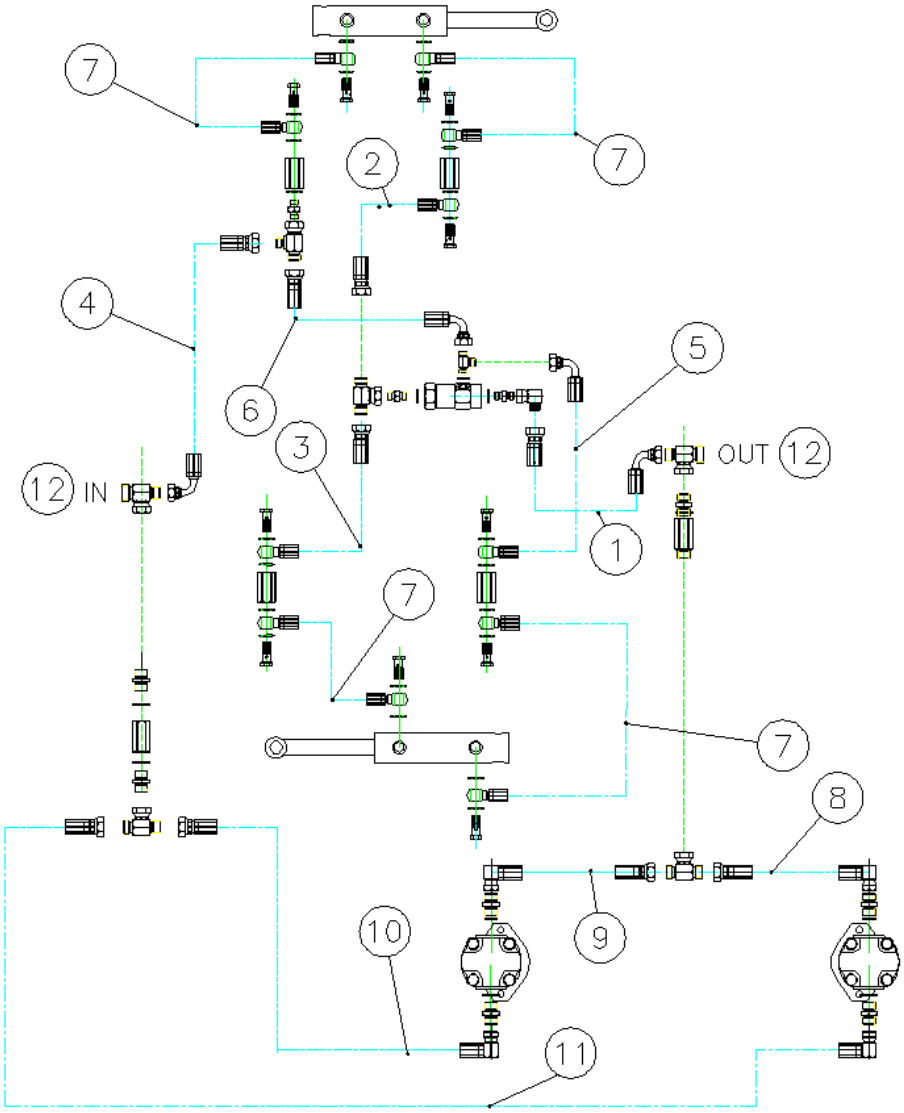

Code	Description
41854	**Hoses Maxi Postmaster**

No.	Code	Description	Quantity
1	41614	MAXI HOSE 1	1
2	41616	MAXI HOSE 2	1
3	41619	MAXI HOSE 3	1
4	41620	MAXI HOSE 4	1
5	41621	MAXI HOSE 5	1
6	41623	MAXI HOSE 6	1
7	41632	MAXI HOSE 7	4
8	41633	MAXI HOSE 8	1
9	41634	MAXI HOSE 9	1
10	41635	MAXI HOSE 10	1
11	41636	MAXI HOSE 11	1
12	41638	MAXI HOSE 12	2

Autoguide Equipment
Stockley Road
Heddington
Nr. Calne
Wiltshire SN11 0PS
England

Tel: +44 (0) 1380 850885

Fax: +44 (0) 1380 850010

Website: www.autoguide.co.uk